MP600
Centrifuge

Data sheet

All MP centrifuges come with bowl disc technology and a choice of external monitoring

Connect via Bluetooth™ using the CentriClean App*

*Only with the Bluetooth™ enabled SCU 0003

IOW Group

MP600
Centrifuge

- The MP600 has been designed for an oil sump capacity of 190 to 1550 litres.
- New bowl design enables a sludge capacity of up to 4 litres.
- The new design also enables the oil throughput to be increased.
- Separation efficiency increases due to bowl and bowl disc design.
- Choice of MODBUS compatible and Bluetooth™ monitoring systems, that reduce maintenance costs and unnecessary cleaning.
- The MP600 has been designed to be fully interchangeable with current products on the market. This means it will fit with existing mountings without any modifications being required.
- Faster bowl speed than any existing market products. This increases centrifugal force, creating better and quicker separation.
- Optional extras are available:
  - Specialised tools
  - Bespoke cut off valve pressure
  - Pneumatic assisted oil return

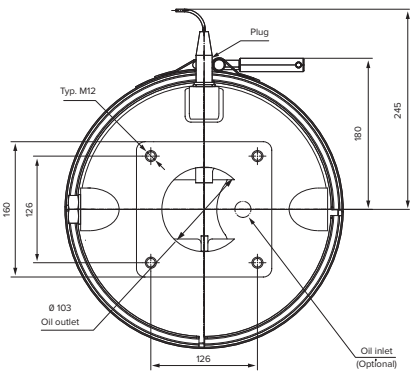

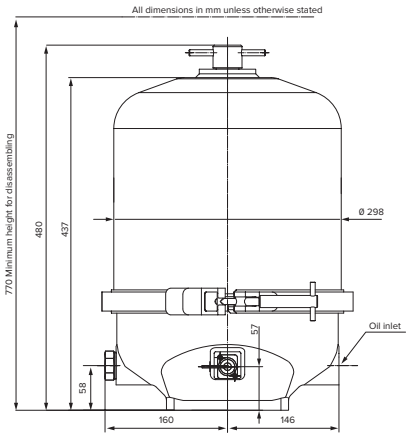

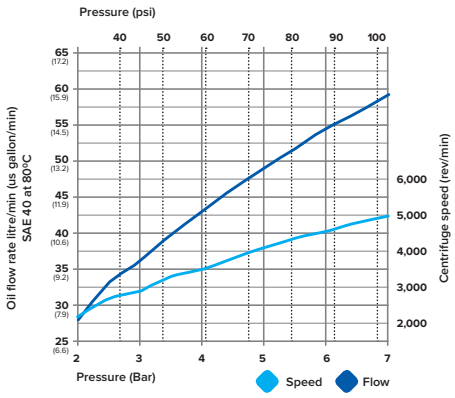

Oil Inlet - Standard ¾" B.S.P
(Others available on request)

Fixing Holes - Standard M12
(Others available on request)

C.O.V. (Bar) - Per request 3.5 / 2.5 / 1.5

Advantages

- Reduction in engine wear
- Reduction in use of lubricating oil
- Aids clean combustion for reduced exhaust emissions
- Saves man hours in cleaning
- Reduced waste disposal costs
- Simple to operate and maintain
- Same day dispatch available on all spares
- Extends service intervals
- Extends life of full flow filters
- Capital cost investment returned quickly
- Environmentally friendly

Markets

- Marine and power
- Automotive
- Trains, trucks & buses
- Agriculture
- Mining
- Construction
- Defence

Find out more...

visit **IOWGroup.com**

IOW Group

IOW Group Ltd reserves the right to make technical modifications to the centrifuge specifications.